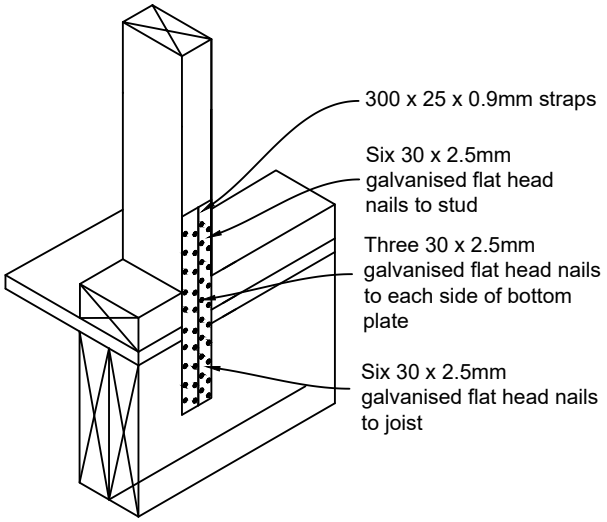

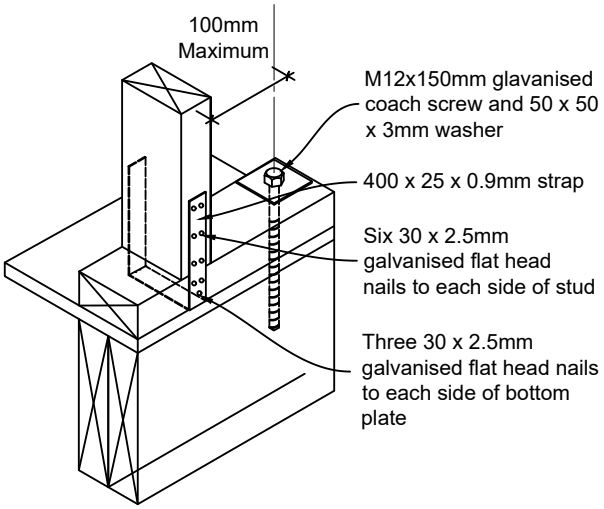

JamesHardie™

www.jameshardie.co.nz

Bracing Design Details

1200MM PANEL - NO HOLD DOWN BRACKETS

www.jameshardie.co.nz
CAD Scale 1:20

FIGURE: 15